**Technical information**
Explosion drawing and parts list

## Hand end trimmer RC21E (Ref. 2100000)

(*) Parts not mounted in the current version

| Pos. | Code | Vrs. | Serie | Item |
|---|---|---|---|---|
| 1 | 2102179 | | | END TRIMMER BODY |
| 2 | 2126078 | | | SPRING |
| 3 | 2122140 | | | ROD |
| 4 | 2122141 | | | ROD |
| 5 | 2102180 | B0 | | SLIDE |
| * 5 | 2145244 | | | END TRIMMER SLIDE WITH SCREWS |
| 6 | 2150112 | | | SPARE BLADES SET FOR RC21E |
| 7 | 9073005 | | | FLAT HD. SCREW M.4X8 PH. |
| 8 | 2102181 | | | LEVER |
| 9 | 8478018 | B1 | 103575 | SCREW M.4X10 |
| * 9 | 7070023 | B0 | | FLAT HD. TAPPING SCREW 6X1/2 PH.BZ. |
| * 9 | 2173026 | | | SCREW M.4X12 |
| 10 | 2119136 | | | LABEL |
| 11 | 1685018 | | | SQUARE NUT M.4 |

**Technical information**
Explosion drawing and parts list

**Hand end trimmer RC21E (Ref. 2100000)**
Edition B

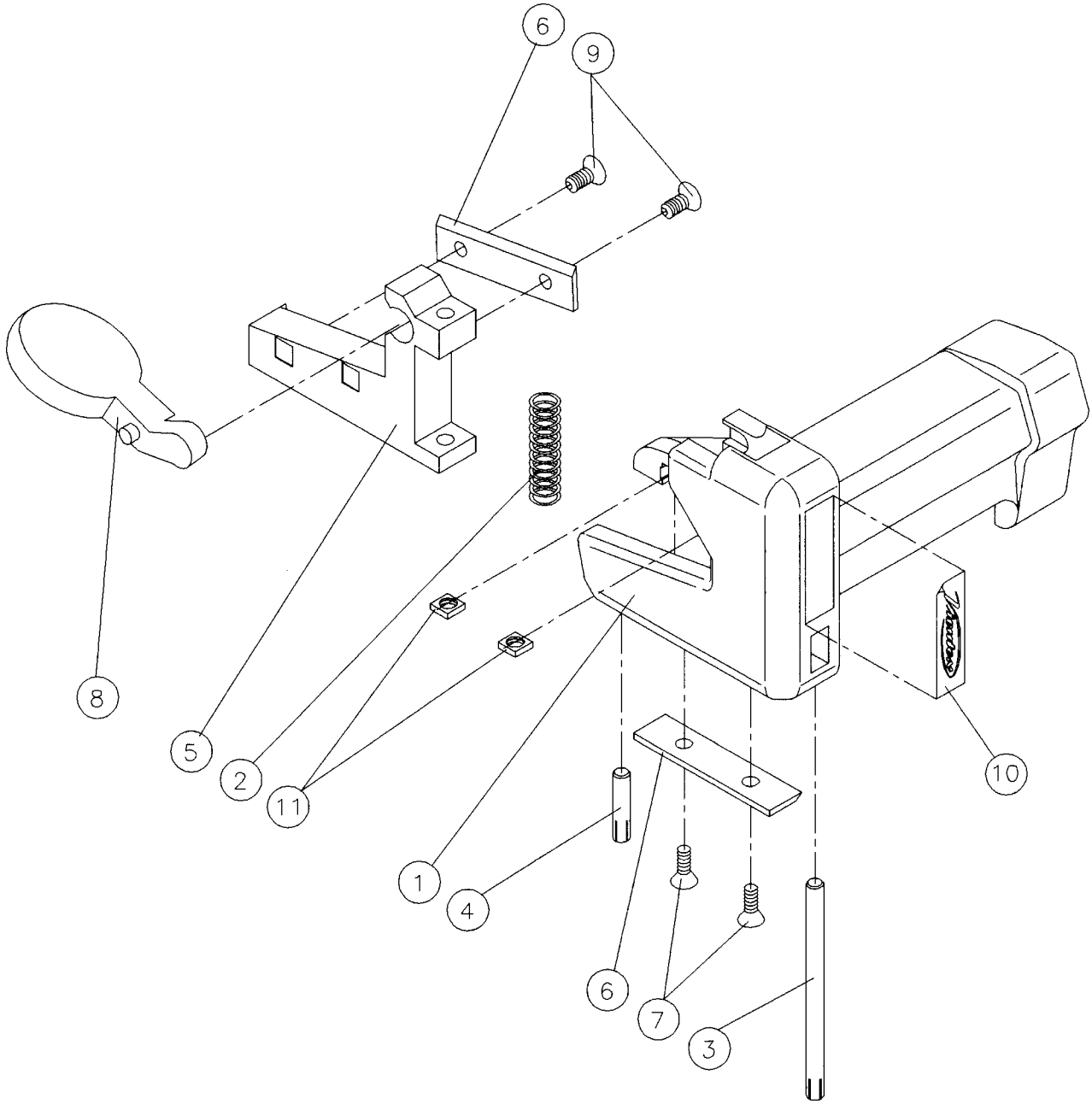

**Technical information**
Explosion drawing and parts list
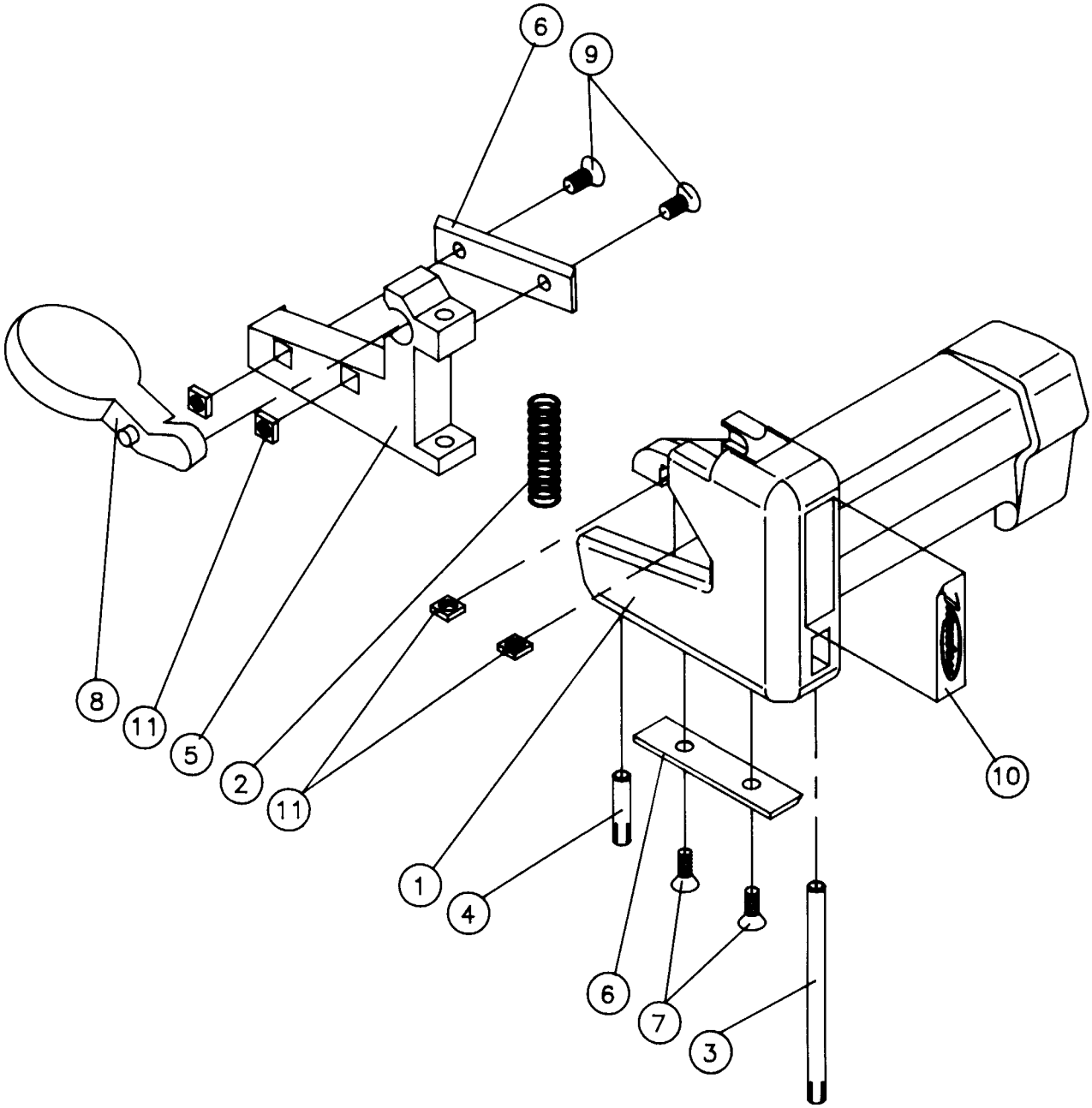
**Hand end trimmer RC21E (Ref. 2100000)**
Edition A