Technical information
Explosion drawing and parts list

Extensions set for PMT111 (Ref. 1146516)
(*) Parts not mounted in the current version

Pos.	Code	Vrs.	Serie	Item	Pos.	Code	Vrs.	Serie	Item
1	1106646			STOPPER					
2	1146518			EXTENSION GUIDE ASS'Y					

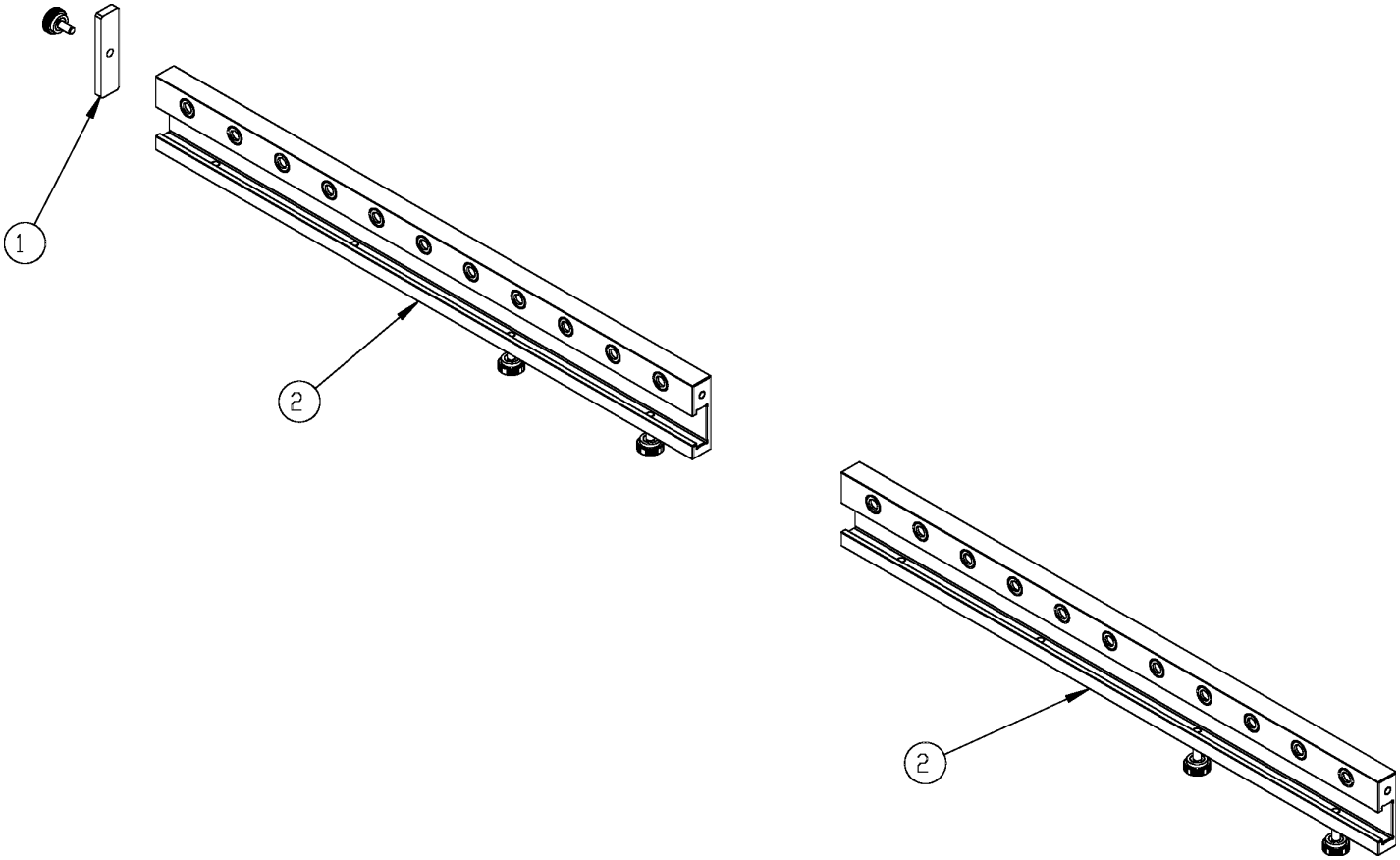
1
2
2